AL-31301

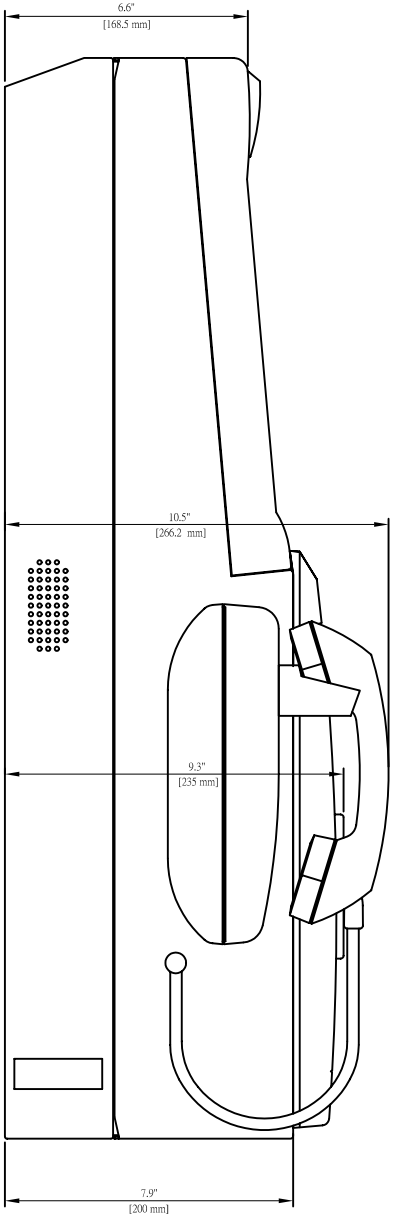

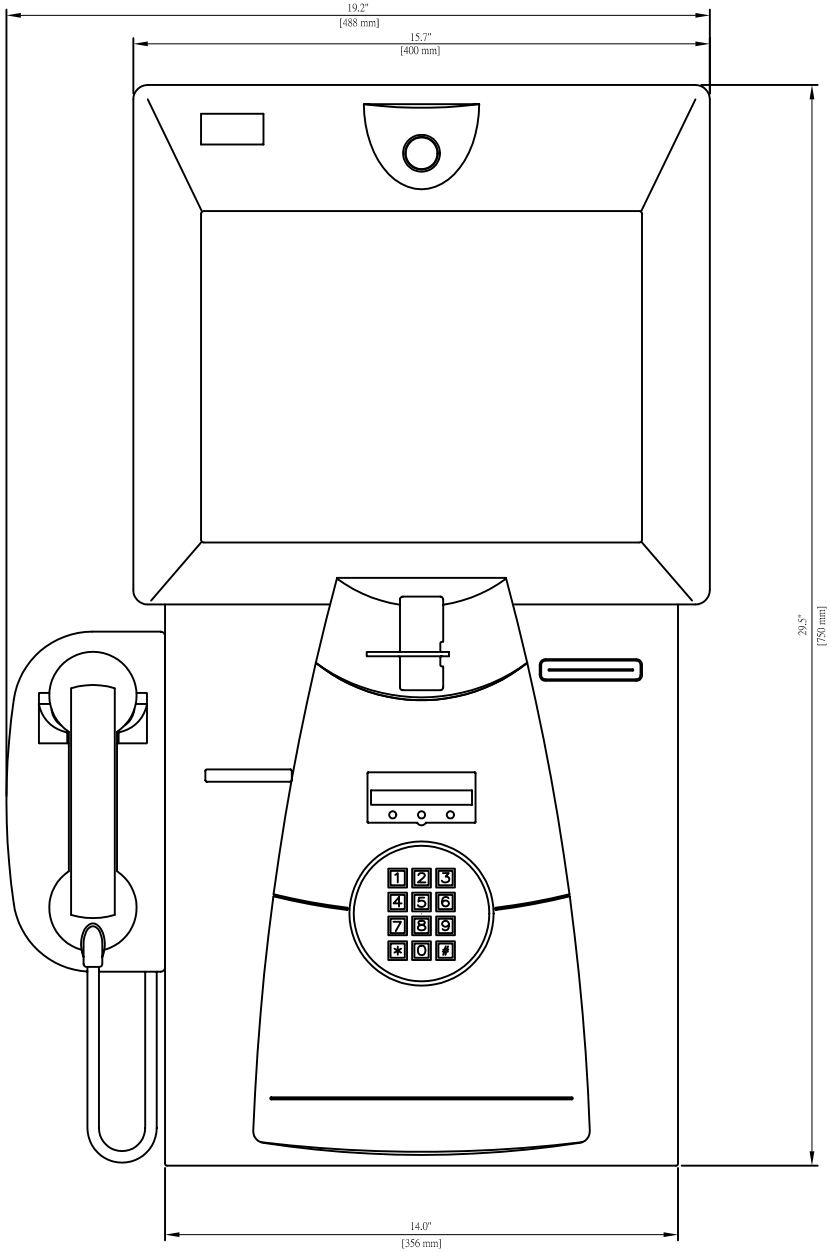

REVISION	DATE	DESCRIPTION	CHANGE BY	APPROVAL BY	REMARKS	ECN NO.

eMINK Corporation				MODEL NAME	AL-31301	Ver.	A
UNIT	inch / MM	MATERIAL		DWG NAME	Outline Drawing		
SCALE	1 : 1	FINISH					
DATE	8 / 25/ 08'	PIECES/SET	/SET	DWG NO.	31301-outline	A3	SHEET /
APPROVED	CHECKED	DESIGNED	DRAWN				
				PART NO.			